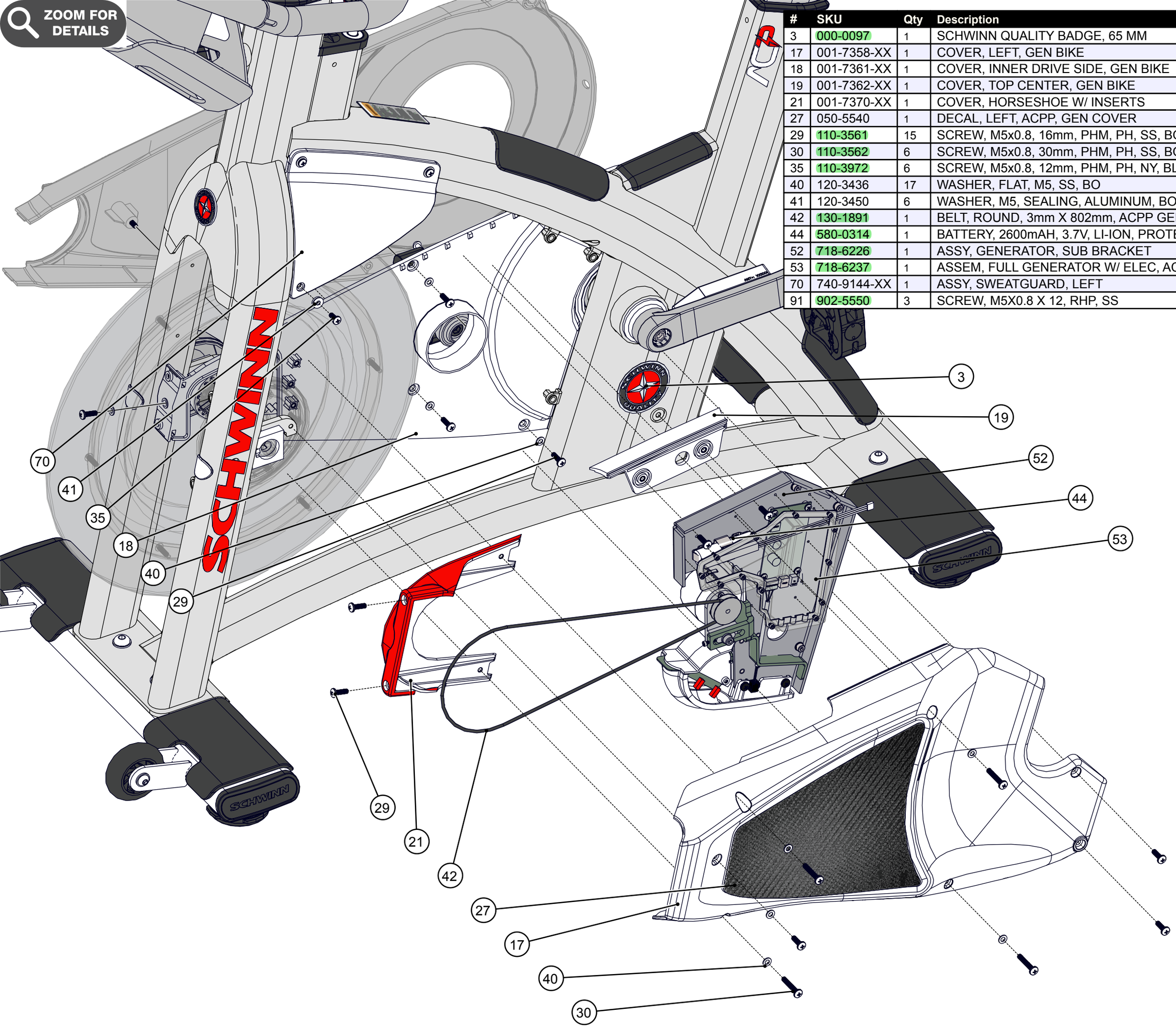

#	SKU	Qty	Description
3	000-0097	1	SCHWINN QUALITY BADGE, 65 MM
17	001-7358-XX	1	COVER, LEFT, GEN BIKE
18	001-7361-XX	1	COVER, INNER DRIVE SIDE, GEN BIKE
19	001-7362-XX	1	COVER, TOP CENTER, GEN BIKE
21	001-7370-XX	1	COVER, HORSESHOE W/ INSERTS
27	050-5540	1	DECAL, LEFT, ACPP, GEN COVER
29	110-3561	15	SCREW, M5x0.8, 16mm, PHM, PH, SS, BO
30	110-3562	6	SCREW, M5x0.8, 30mm, PHM, PH, SS, BO
35	110-3972	6	SCREW, M5x0.8, 12mm, PHM, PH, NY, BL
40	120-3436	17	WASHER, FLAT, M5, SS, BO
41	120-3450	6	WASHER, M5, SEALING, ALUMINUM, BONDED
42	130-1891	1	BELT, ROUND, 3mm X 802mm, ACPP GEN BIKE
44	580-0314	1	BATTERY, 2600mAH, 3.7V, LI-ION, PROTECTED
52	718-6226	1	ASSY, GENERATOR, SUB BRACKET
53	718-6237	1	ASSEM, FULL GENERATOR W/ ELEC, ACPP
70	740-9144-XX	1	ASSY, SWEATGUARD, LEFT
91	902-5550	3	SCREW, M5X0.8 X 12, RHP, SS

9-7300: Left Side Shrouds & Generator Detail